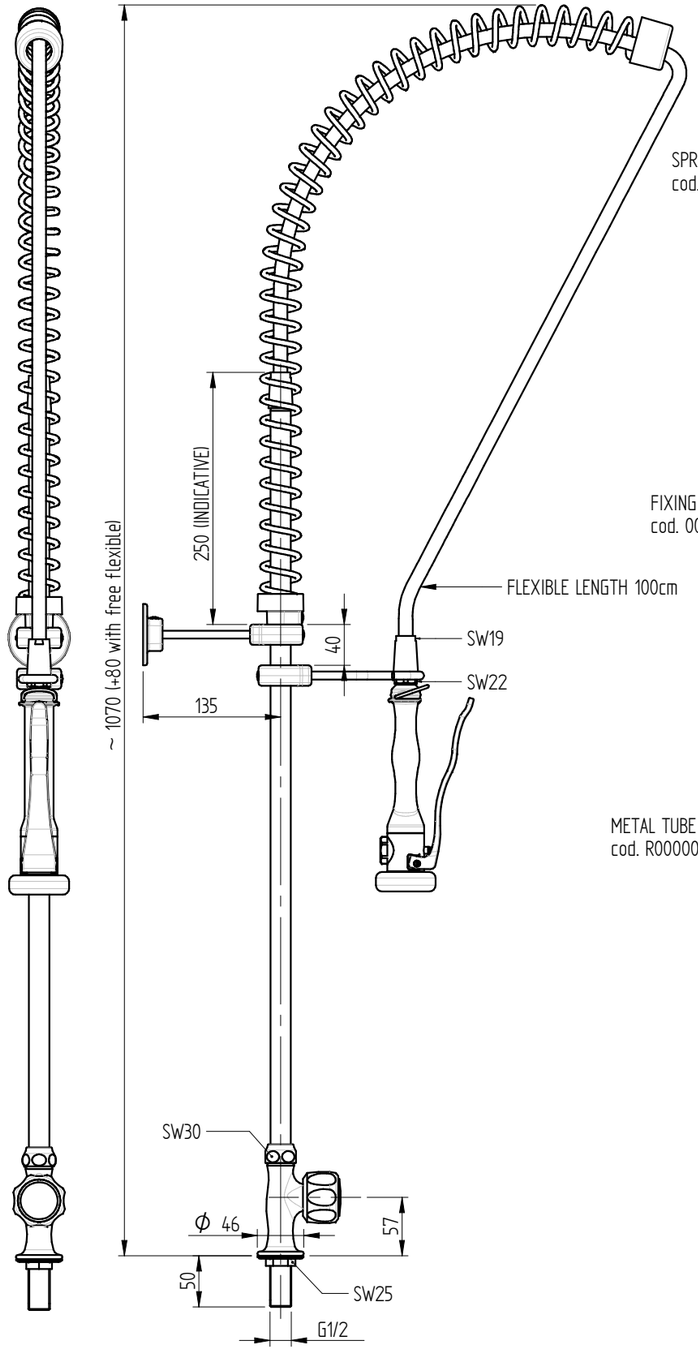

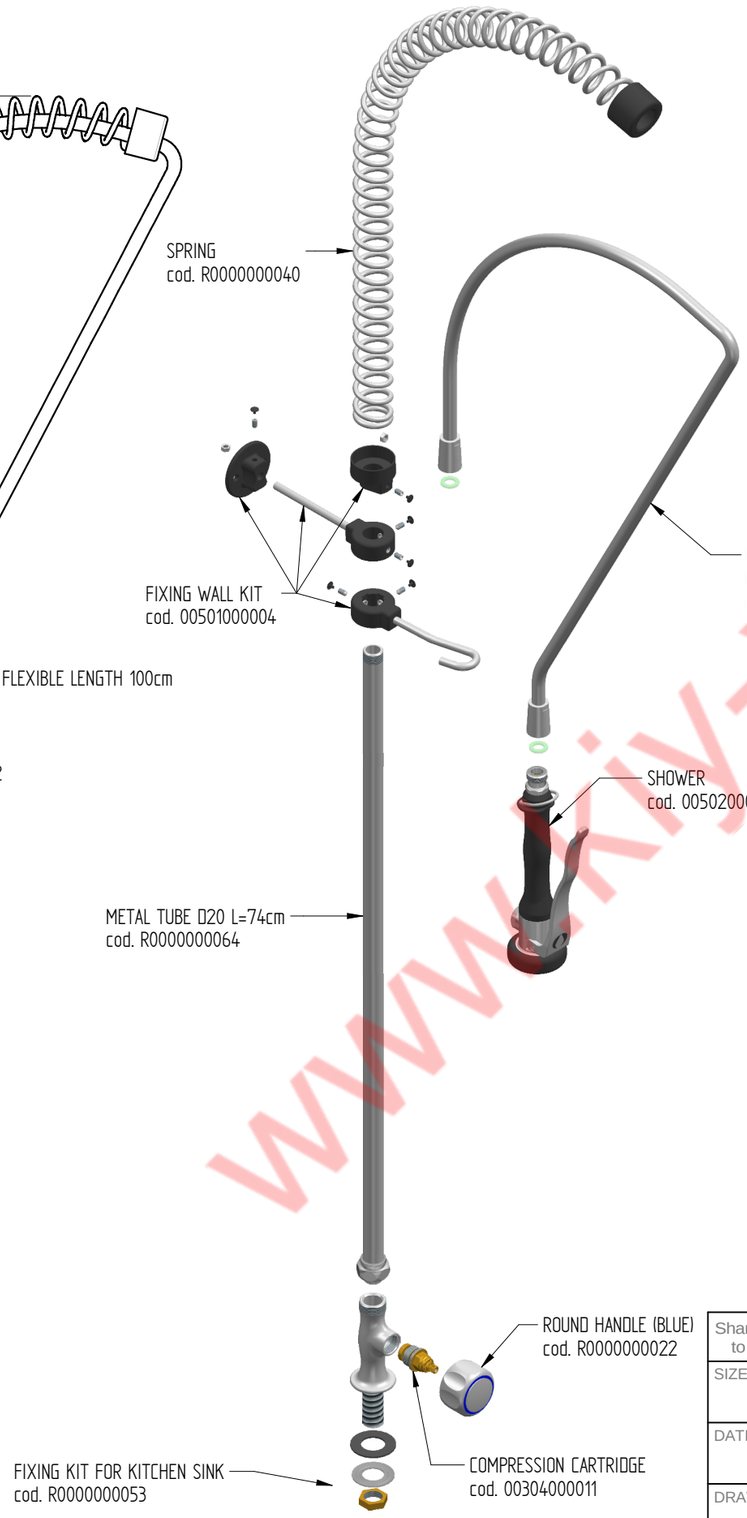

FLOW RATE : 12 L/min at 3,5 BAR only from the shower

sink fixing hole : ø25 mm

Shares without tolerance according to standard **UNI-EN-22768-1-m**	DESCRIPTION ONE HOLE PRE-RINSE COLD WATER UNIT WITH ROUND HANDLE AND PREMIUM SHOWER HAND		CODE P0101020117
SIZE A3	European Projection		WEIGHT 3,52 Kg
DATE 16-06-2020	SCALE 1:6	MONOLITH DESIGN AND TECHNOLOGICAL RESEARCH FOR WATER	
DRAWN PICCOLO M.			
VALIDATE PICCOLO M.		VIA DELL'ARTIGIANO 8/F-8-G , 31050 MONASTIER di TREVISO (TV) tel: 0422 842157 - fax: 0422 708978	

DONE WITH DESIGN CAD - PROHIBITED THE CHANGES MANUAL

www.kiy-v.ua

Rev. 00